Parts Catalog



G14

Slicing Machine

Model: G14

05/18/2023 Rev H, Serial Number 902702 and Up
IMPORTANT!
TO EXPEDITE SHIPMENT OF PARTS, ALWAYS SPECIFY MODEL, REV,
PART NUMBER, AND SERIAL NUMBER OF UNIT.

GLOBE FOOD EQUIPMENT COMPANY

2215 East River Road
Dayton, Ohio 45439

Parts Department
Toll Free 1-800-745-6238 · Fax (937) 290-0585
E-Mail: info@globefoodequip.com
Website: www.globefoodequip.com

Not for resale

© Globe Food Equipment Company, 2023

Table of Contents

Description	Page
G14 Base Components	4
G14 Chute Components	6
G14 Knife and Sharpener Components	8
G14 Electrical Components	10
G14 Wiring Diagram - 115, 50_60 Hz, 1PH SN 902003 and Up	12

G14 Base Components

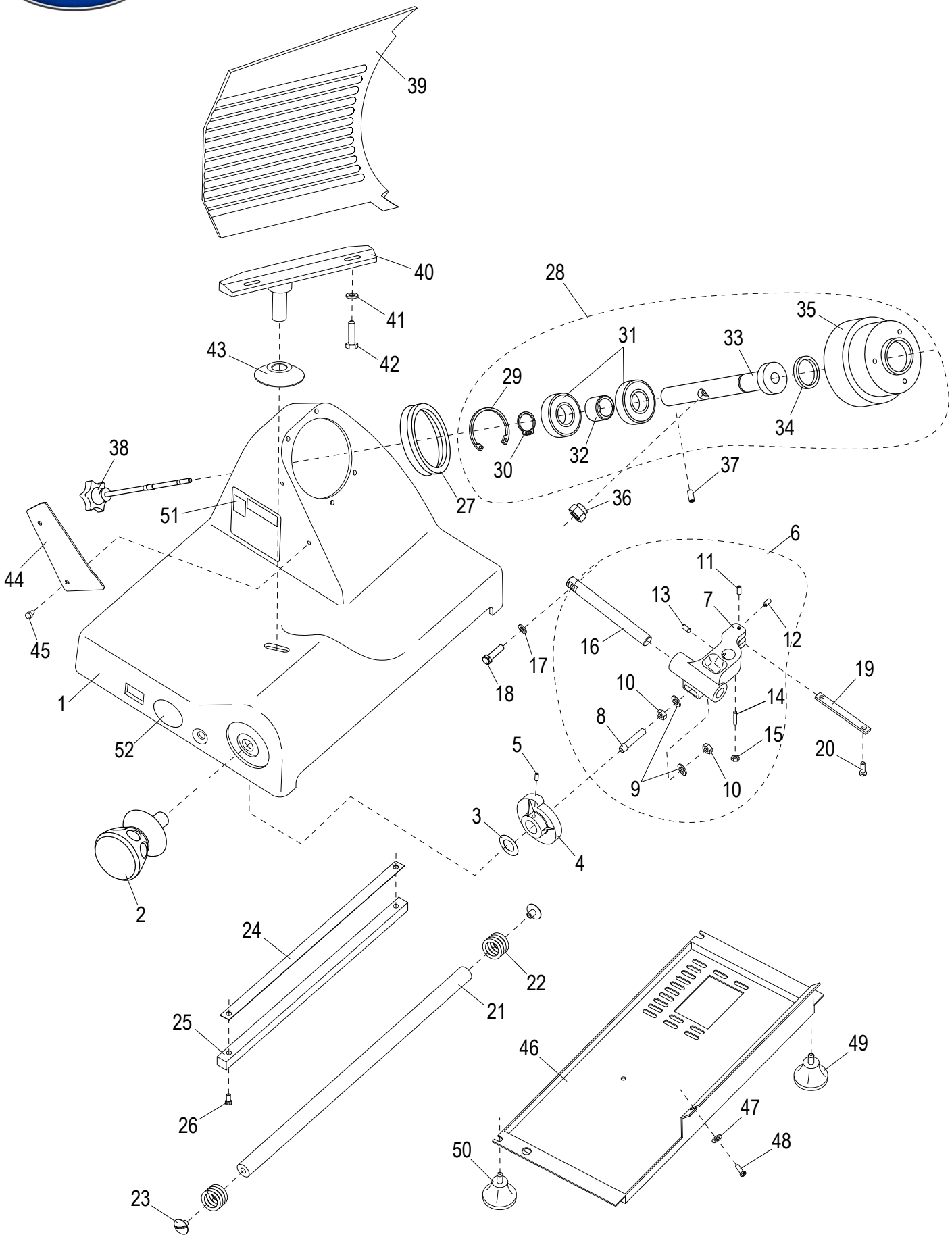

© Globe Food Equipment Company

G14 Base Components

Item	Part Number	Description	Qty	Serial Number
1		Slicer Base	1	
2	M00209	Table Adjustment Knob	1	
3	M003	Wave Washer	1	
4	M004	Cam	1	
5	H00181	Set Screw	2	
6	M305	Table Slide Assembly (Incl. items 7-16)	1	
7		Table Slide	1	
8	M03026	Threaded Rod	1	
9	X08101	Washer M8x16mm Flat	2	
10	H00192	Hex Nut M8-1.25,13mm Width,4 mm Height-Zn	2	
11	H00182	Set Screw M5x10 Flat Pt Slotted - Zn	1	
12	H00185	Set Screw	1	
13	H00186	Set Screw M8-1.25x10 Cup Pt. Hex Socket - BO	2	
14	H00188	Set Screw	1	
15	X30186	Hex Nut M5-0.8 OD-8, TH-4mm, Zinc	1	
16	MR36	Table Slide Rod	1	
17	X08101	Washer M8x16mm Flat	2	
18	H00116	Hex Head Screw M6-1.0x20 - Zn	2	
19	M016	Table Slide Plate	1	
20	H00061	Hex Head Screw M5x10, Zinc	2	
21	M00242	Round Slide Rod	1	
22	M00243	Spring	2	
23	ME25	Screw	2	
24	ME31/1	Wear Strip	1	
25	M00244	Square Slide Bar	1	
26	H00056	Screw	2	
27	M00245	Hub Seal	1	
28	MS12/2A	Knife Hub Assembly (Incl. items 29-35)	1	
29		Retaining Ring, Internal	1	
30	H00195	Retaining Ring, External	1	
31	M020	Bearing (6204 6RS)	2	
32	M00249	Spacer	1	
33		Shaft, Knife Hub	1	
34	MR12/7	Oil Seal	1	
35		Pulley, Knife Hub	1	
36	MCR61	Knife Hub Nut	1	
37	H00184	Set Screw	1	
38	M00250	Knife Cover Release Knob	1	
39	M00251	Table	1	
40	M00252	Table Support	1	
41	X08101	Washer M8x16mm Flat	2	
42	H00196	Screw	2	
43	M073	Hole Cover	1	
44	MS22	Slice Deflector	1	
45	MCC23	Thumb Screw	2	
46	MS64	Bottom Cover	1	
47	H00063	Flat Washer, M5, Zinc	1	
48	H00061	Hex Head Screw M5x10, Zinc	1	
49	M115	Foot	2	
50	M00229	Front Foot	2	
51	M91022	Warning Label	1	
52	M91021	Globe Logo	1	

© Globe Food Equipment Company

G14 Chute Components

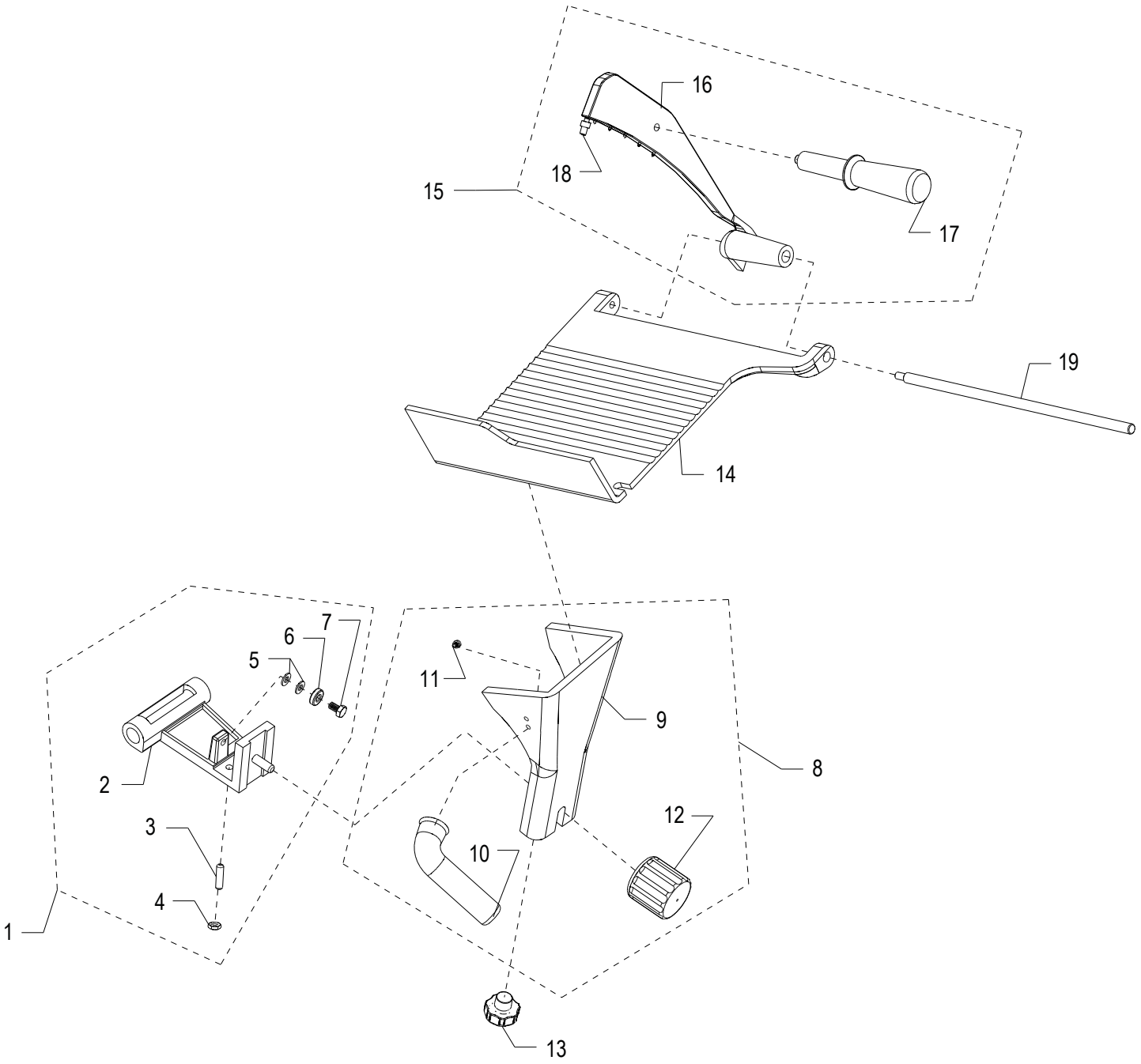

© Globe Food Equipment Company

G14 Chute Components

Item	Part Number	Description	Qty	Serial Number
1	M00290	Chute Slide Assembly (Incl. items 2-7)	1	
2		Chute Slide	1	
3	MS30	Brass Stud	1	
4	H00192	Hex Nut M8-1.25,13mm Width,4 mm Height-Zn	1	
5	X08101	Washer M8x16mm Flat	2	
6	M056	Bearing (608 2RS)	1	
7	H00117	Hex Head Screw M8x20 - Zn	1	
8	M00282	Chute Support Assembly	1	
9		Chute Support	1	
10	M067	Chute Support Handle	1	
11	H00156	Ext. Hex Hd M6x1.0x12 mm Screw Zinc 8.8	2	
12	M00268	Chute Support Knob	1	
13	M00254	Chute Release Knob	1	
14	M01068	Chute	1	901213 - 902701
14	M02732	Chute	1	902702 ->
15	M01069	End Weight Assembly (Incl. items 14-16)	1	901213 - 902701
15	M02737	End Weight Assembly	1	902702 ->
17	M00261	End Weight Handle	1	
16		End Weight	1	
18	M01070	Bumper	1	901213 - 902701
18	M02733	Bumper	1	902702 ->
19	M01071	End Weight Rod	1	
20	M500A	Chute Fence Assembly (Not Shown)	1	
21	M00289	Fence Release Knob (Not Shown)	1	
22	741-5B	Bumper (Not Shown)	1	

© Globe Food Equipment Company

G14 Knife and Sharpener Components

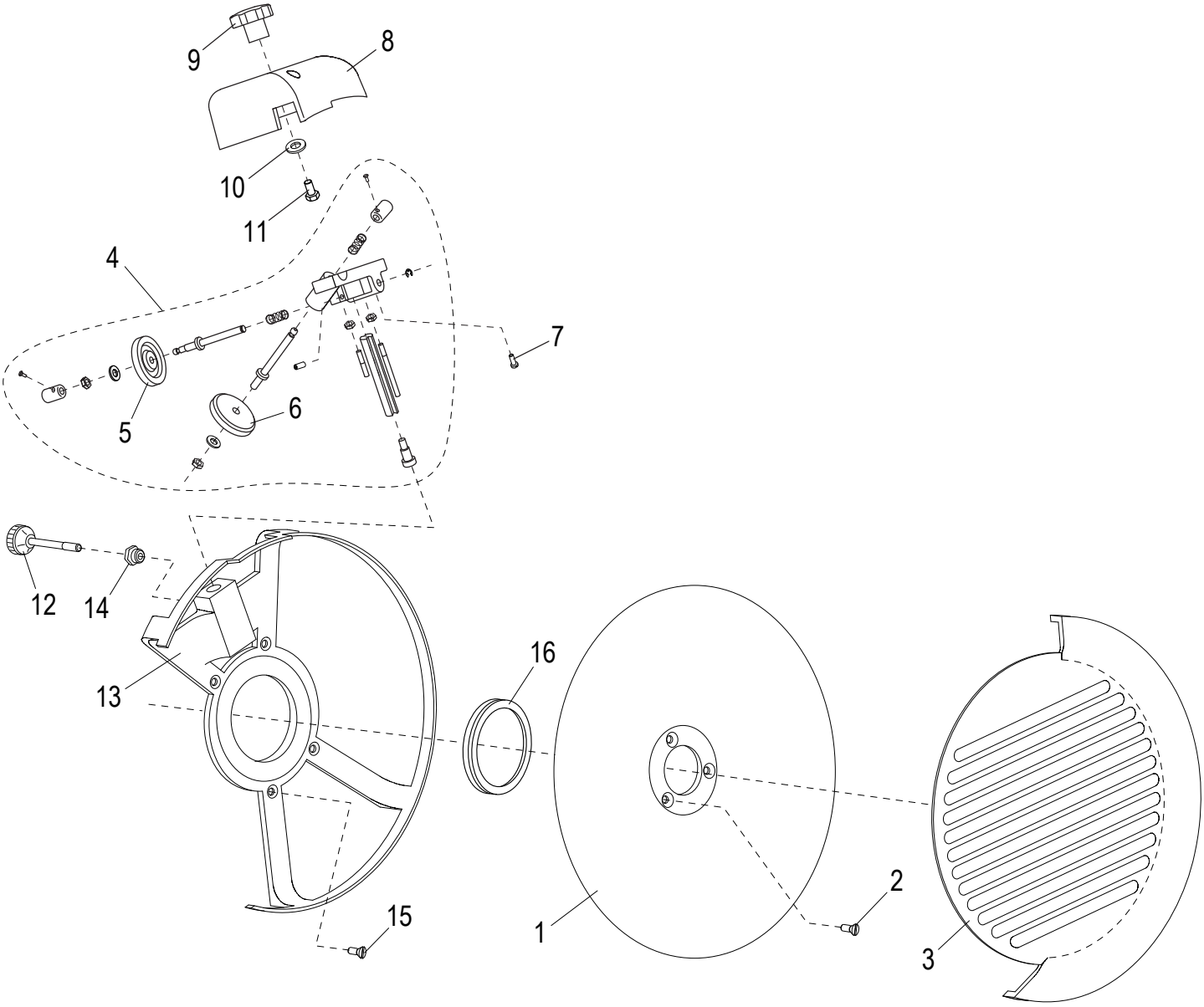

© Globe Food Equipment Company

G14 Knife and Sharpener Components

Item	Part Number	Description	Qty	Serial Number
1	MG13	Knife	1	
2	H00201	Screw	3	
3	M00332	Knife Cover	1	
4	MC17A	Sharpener Assembly	1	
5	M092	Deburring Stone	1	
6	MCC17	Sharpening Stone	1	
7	H00187	Cheese Hd Screw M5-0.8x16 Slotted - Zn	2	
8	M074	Sharpener Cover	1	
9	M075	Sharpener Cover Knob	1	
10	M035	Flat Washer ID 6.5 OD 12 TH 1.5 mm Zinc	1	
11	H00197	Hex Hd Screw M6x15 - Zn	1	
12	M096	Sharpener Release Knob	1	
13	MS14/1	Rim Guard	1	
14	M045	Insert	1	
15	H00435	Screw	4	
16	MS77/5	Knife Seal	1	

© Globe Food Equipment Company

G14 Electrical Components

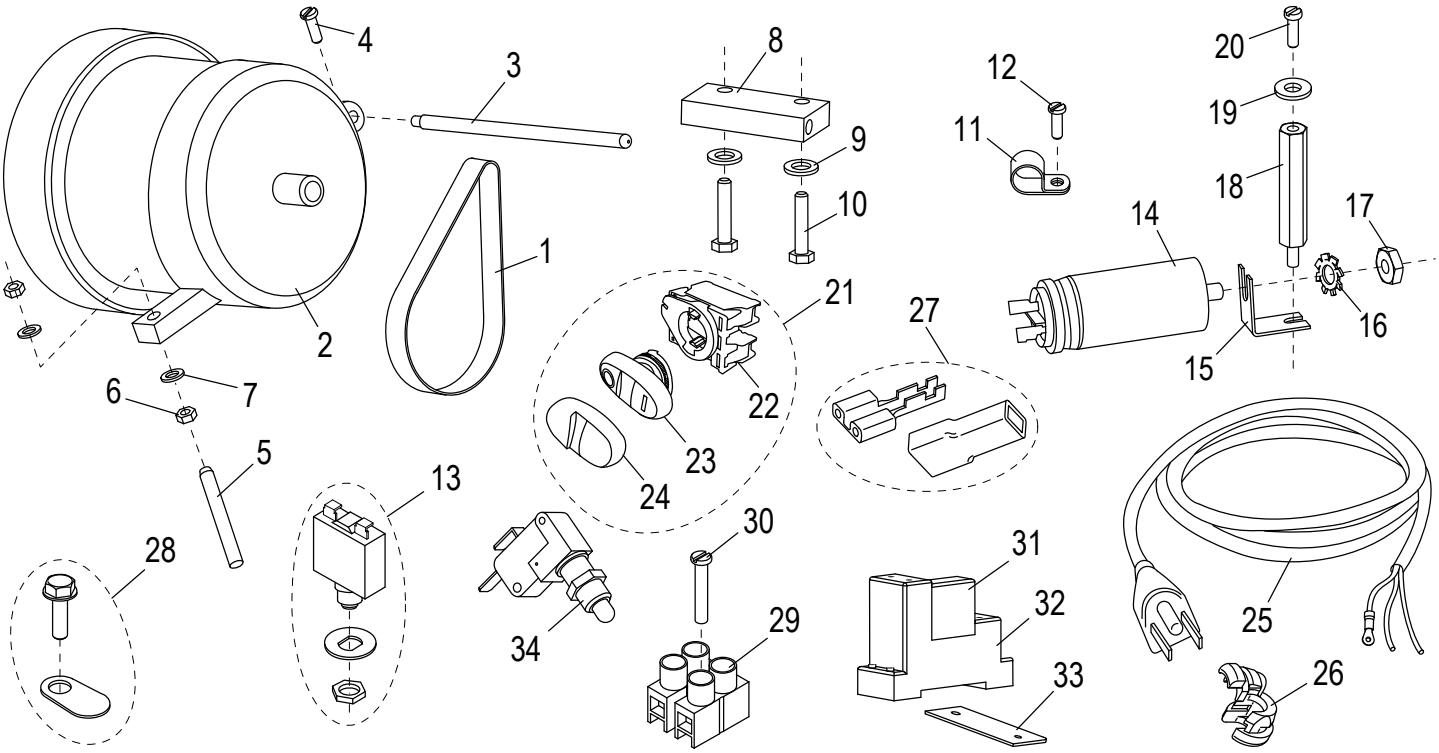

© Globe Food Equipment Company

G14 Electrical Components

Item	Part Number	Description	Qty	Serial Number
1	MS51	Belt	1	
2	MS43/1	Motor (115V/60HZ/4.5A)	1	
3	MB52/1	Pin	1	
4	H00189	Cheese Hd Screw M4-0.7x10 Slotted - Zn	1	
5	M033	Threaded Rod	1	
6	M034	Hex Nut M6x1.0 OD 10 mm TH 5 mm Zinc	2	
7	M035	Flat Washer ID 6.5 OD 12 TH 1.5 mm Zinc	2	
8	M00356	Mounting Block	1	
9	H00063	Flat Washer, M5, Zinc	1	
10	H00357	Screw	2	
11		Cable Clamp	1	
12	H00061	Hex Head Screw M5x10, Zinc	1	
13	MK7004	Reset Switch	1	
14	MB54/3	Capacitor	1	
15		Bracket, Capacitor Mounting	1	
16	H00335	Lock Washer M8, ID-8.4, OD-15, TH-0.8mm Zn	1	
17	H00192	Hex Nut M8-1.25,13mm Width,4 mm Height-Zn	1	
18	M00361	Standoff	1	
19	M035	Flat Washer ID 6.5 OD 12 TH 1.5 mm Zinc	1	
20	H00061	Hex Head Screw M5x10, Zinc	1	
21	M02050	Power Switch Assembly	1	902003 ->
22		Contact Assembly	1	902003 ->
23	M02048	On/Off Switch	1	902003 ->
24	M02047	Power Switch Cover	1	902003 ->
25	M110	Power Cord	1	
26	M111	Strain Relief	1	
27	M00233	Terminal & Insulator	15	
28	M00334	Ground Screw	1	
29	MB80/2	Terminal Block w/Screw	1	
30	M029	Screw	1	
31	MCR75	Relay	1	
32	MCR76	Relay Mount	1	
33	M00360	Mounting Plate	1	
34	M026	Microswitch	1	

© Globe Food Equipment Company

G14 Wiring Diagram - 115, 50_60 Hz, 1PH SN 902003 and Up

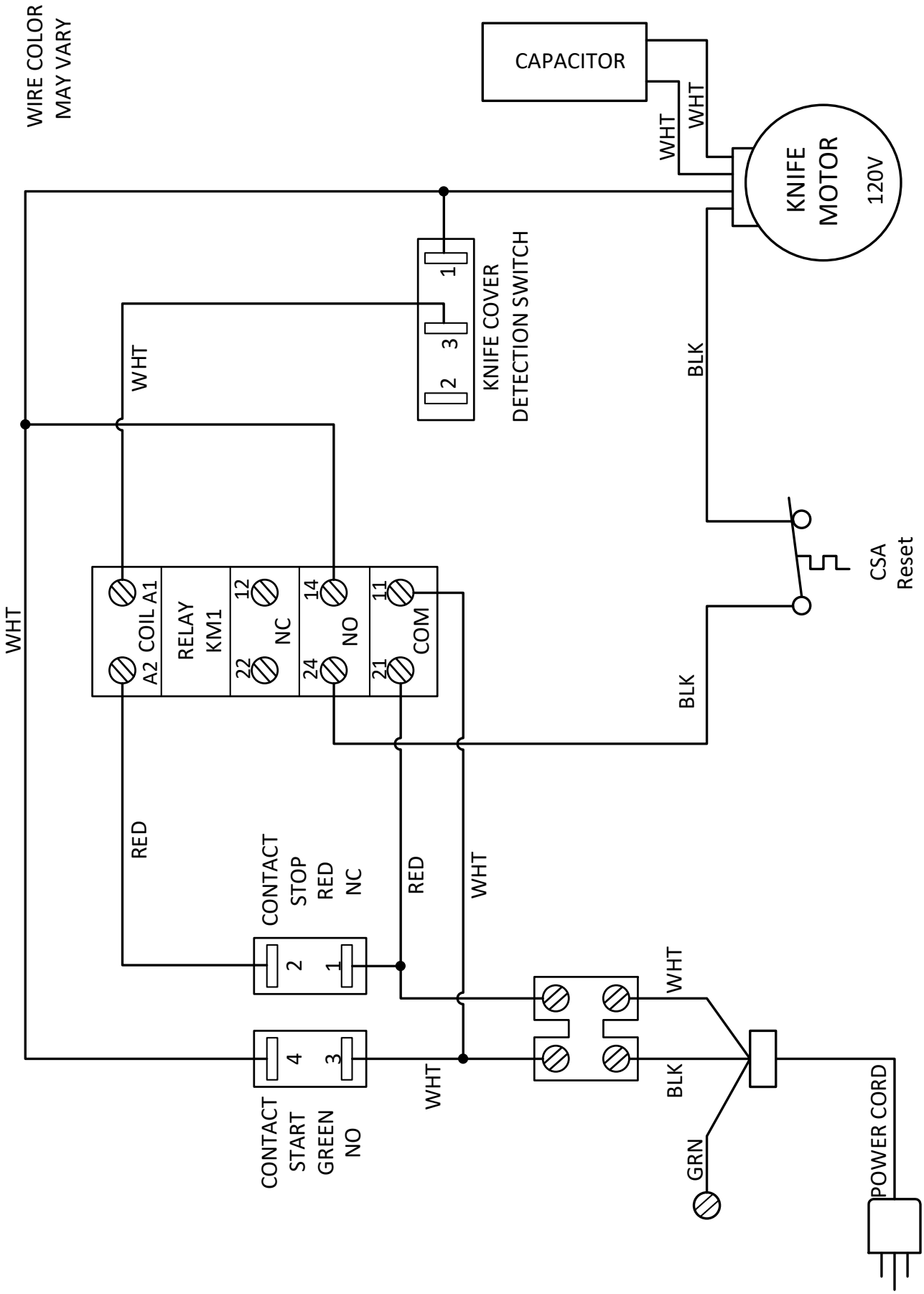

© Globe Food Equipment Company